THE DONKEY SANCTUARY

SOME USEFUL MEASUREMENTS FOR YOUR STABLE

DOOR HEIGHT:

The stable door should be low enough for your donkey to lean over but high enough to prevent them from jumping out. Stable doors made for horses at 4' 6" (132cm) are too high for standard donkeys, but may be suitable if you have a large donkey breed. It is advisable to have a bottom bolt as some donkeys can learn to undo the top one. A bottom bolt will also prevent the donkey from getting their foot caught in the door should he kick it. Kick bolts are the easiest to use as they can be operated with your foot.

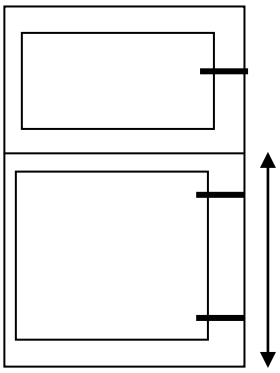

Bottom door height is 3' 6" (107cm) for standard donkeys and, ideally, the door width should be 4' (122cm).

FLOOR LEVEL FEEDER:

In the wild, donkeys graze with their heads down. It is not natural for them to eat from a net or rack. If they reach up for their food from a net or rack then some particles of hay or straw could fall into their ears or eyes and respiratory problems can be exacerbated. Haynets or racks must be sited high enough to avoid entanglement with hooves as your donkeys move around or rolls; bear in mind the height of all animals if you have a mixed herd. To prevent this, provide a floor level feeder with no sharp edges. Place enough straw in the feeder so that they can browse through it. There will be no waste as the remainder can be used for bedding the following day. However, take care to fill floor feeders no higher than the donkey's shoulder as over filling also brings risks, to the donkey's ears and eyes. False bottoms should be fitted to floor feeders so that donkeys do not have to reach inside, down to the floor; which can cause damage to their windpipe. If possible, position the feeder so that the donkey's feet are not on the bedding while they are eating.

STRAW FEEDER MEASUREMENTS:

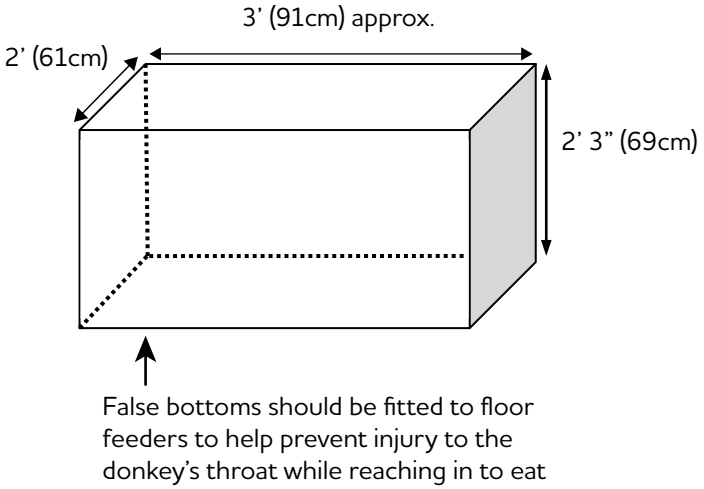

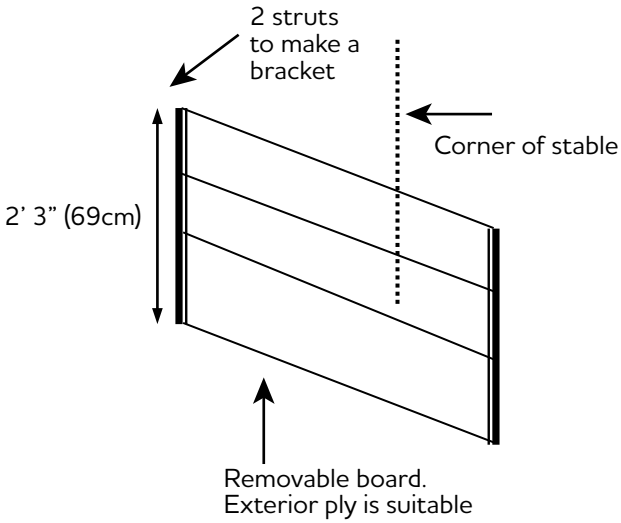

WATER:

Donkeys should always have access to a clean water supply. They are very fussy about what they drink. A securely supported bucket or a self-filling trough should be constantly available and should be cleaned out daily. The use of buckets allows the accurate monitoring of water intake but a self-filling water trough does mean that the donkeys' water will not run out during the day or night. As a rough guide, the trough needs to be approximately 2' 6" (76cm) from the floor to the top edge of the trough.

To help prevent troughs from freezing during winter months a small floating football can be placed into the trough to keep the surface water moving or a float heater can be purchased, other more sophisticated antifreeze devices are also available. Plywood can be used to cover and insulate part of the trough leaving a smaller space for the donkey to drink from, and the trough, if mobile, can be sited somewhere it will catch the winter sun during the day, therefore making it less likely to freeze. If you are not at home during the day consider placing a bucket of water in their stable where it is unlikely to freeze.

MINERAL LICK:

An equine mineral block should be hung up inside your stable or shelter so that the donkeys can supplement their diet as they wish. Molassed treat licks are not encouraged due to the amount of molasses that they contain which can cause the onset of laminitis. If your donkeys are fed a vitamin and mineral balancer there is no need to supplement with a mineral lick as well.

ELECTRICITY SUPPLY:

Electric lights are highly desirable in the winter months and the facility for a heat lamp is useful, especially for old or unwell donkeys. All wiring should be encased in rat-proof tubing and all switches should be weatherproof, donkey proof and positioned outside the stable. Lights should have plastic covers and wire mesh guards.

IDEAL SHELTER/STABLE SIZE:

Allow approximately 4.5 square meters (50 square feet) of covered area per donkey, approximately 9 square meters (100 square feet) for a pair.

TYING-UP RINGS:

It is important to fit tying-up rings at your donkeys eye level. Do not tie the donkey up directly to the tie ring. Spliced baling twine or specially designed elasticated ties should be used so that they will break in an emergency, should the donkey panic and pull back.

If you need any further advice or information please do not hesitate to use the details below to contact us.